隆华压铸机
LONGHUA

LONGHUA DIE CASTING MACHING

36

年品质保证

THIRTY-SIX YEARS OF QUALITY
ASSURANCE.



CONTENS

目录

01
COMPANY PROFILE
企业简介
01-02

02
ENTERPRISE HONOR
企业荣誉
03-08

03
PRODUCTS CATALOG
产品目录
09-25

04
ACCESSORIES SHOW
周边设备及压铸件
27-42

05
AFTER SALE SERVICE
售后服务
43-44

隆华压铸机
LONGHUA







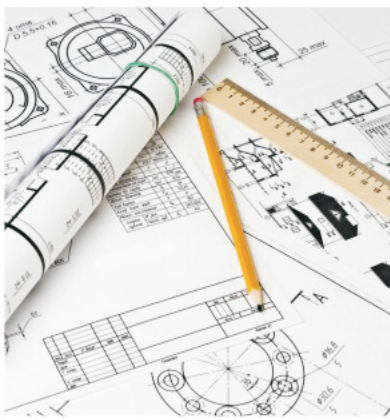

COMPANY PROFILE

企业简介

隆华压铸机1982年创立于安徽蚌埠，是一家专业从事设计，制造和销售冷室压铸机，压铸周边设备的高新技术企业。

2005年12月10日，安徽省委书记王金山，视察隆华时指出“强化科技，树立品牌，重视人才，自主创新"。

隆华系列压铸机产品，荣获“中华人民共和国第一机械工业部”部优产品称号，是迄今为止业内唯一获此殊荣的产品。

隆华节能高速相继荣获：国家知识产权局：“九项发明专利，八项实用新型专利”，“国家级科技成果2项”“市级科技成果4项”“国家级火炬计划项目一项”，“铸造机械行业标准示范单位”，“中国产品质量协会理事单位”，“守合同重信用企业”，“进出口免检产品”，“安徽省高新技术企业”等荣誉。

隆华压铸机适用于汽车及摩托车零部件（发动机缸体，汽缸盖，曲轴箱体，链门罩盖，油底壳，变速箱壳体，变速箱端盖，仪表板等），电动扶手梯级/踏板，工业/公路/铁路/航空/农业机械，射灯外壳，建材零件,家具，铝艺，铜艺，镁合金产品，有色金属深加工等压铸件产品。

隆华产品远销：巴西，埃及，南非，越南，巴基斯坦，孟加拉国，乌拉圭，印度，俄罗斯，哈萨克斯坦，吉尔吉斯坦，乌克兰，伊朗，伊拉克，朝鲜，日本,厄瓜多尔,美国，韩国，阿尔及利亚，中国台湾等国家及地区。

隆华质量宗旨：“今天的质量，明天的市场”

Longhua Die-Casting Machine, founded in Bengbu, Anhui Province of China, in 1982, is a professional high-tech enterprise engaged in the design, manufacture and sale of cold chamber die casting machine and die-casting peripheral equipment.

December 10, 2005, Wang Jinshan, Secretary of Anhui Provincial Party Committee, pointed out that "Longhua people shall strengthen science and technology, build reputation, value talents, and pursue independent innovation" during his visit to Longhua.

Longhua series of die-casting machines was awarded the title of Superior Product by "First Ministry of Machine-Building Industry, the People's Republic of China ". They are the only products who have won the honor so far.

Longhua with its energy-saving and high-speed products has been granted in succession "nine invention patents and eight utility model patents" by State Intellectual Property Office, "One of National Torch Plan Programs", "state-level scientific and technological achievements, " "municipal scientific and technological achievements "," A Standard Model for Foundry Machinery Industry", "A Member of China Product Quality Association", "Credible Enterprise", "Import and Export Inspection-Free Product", "High-Tech Enterprise in Anhui Province" and other honors:

Longua die-casting machines are applicable to manufacture of automobile and motorcycle parts (engine cylinder block, cylinder head, crankcase, hinged door covers, oil pan, gearbox housing, gearbox end cap, dashboard, etc.), electric escalator handrail/steps, industrial/road/railway/air/agricultural machinery, spotlight shells, building material parts, furniture, aluminum arts, copper arts, magnesium alloy products, non-ferrous metal processed products and other die casting products.

Longhua products are exported to Brazil, Egypt, South Africa, Vietnam, Pakistan, Bangladesh, Uruguay, India, Russia, Kazakhstan, Kyrgyzstan, Ukraine, Iran, Iraq, North Korea, Japan, Ecuador, the United States, South Korea, Algeria, China Taiwan and other countries and regions.

Longhua' s quality goal is that "Today' s quality means tomorrow's market".

隆华压铸机
LONGHUA

ENTERPRISE HONOR | 企业荣誉



















36年的品质保证

THIRTY-SIX YEARS QUALITY ASSURANCE





















不断创新 铸造未来

CSTING THE FUTURE

隆华节能高效压铸机项目，荣获国家知识产权局，十一项发明专利，十项实用新型专利

Long Hua energy efficient die-casting machine project won the State Intellectual Property Office, nine invention patents, eight utility models patents

资质证书 INTELLECTUAL PROPERTY





安徽省省委书记王金山到蚌埠隆华压铸机厂视察
Wang Jinshan, Secretary of the Anhui provincial Party committee, visited the Bengbu Longhua die casting machine factory



2006年12月省委书记王金山视察隆华压铸机厂
In December 2006, the provincial Party committee secretary Wang Jinshan inspected Longhua diecasting machine factory

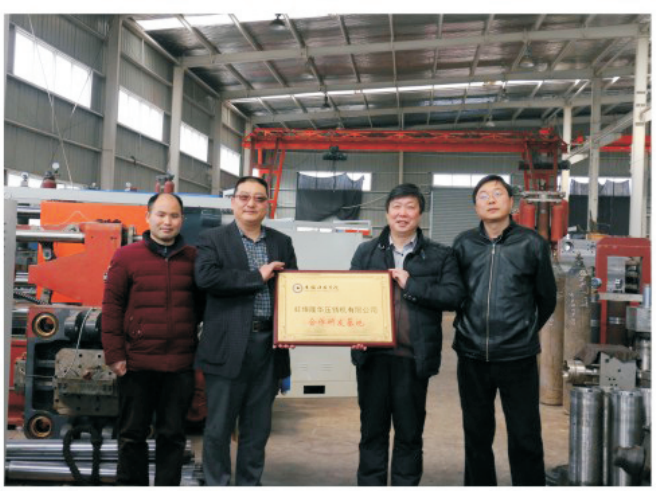

2014年隆华压铸机与安徽科技学院成立压铸机合作研发基地
In 2014, Long Hua die-casting machine and Anhui Science and Technology University set up R & D base of die casting machine



白俄罗斯客户在隆华
Belarus customers in Longhua



孟加拉国客户在隆华
Bangladesh customers in Longhua



阿尔及利亚客户在隆华
Algeria customers in Longhua



阿尔及利亚客户在隆华
Algeria customers in Longhua



孟加拉国客户在隆华
Bangladesh customers in Longhua



巴基斯坦客户在隆华
Pakistan customers in Longhua

LH-140T压铸机 | DIE CASTING MACHINE



液压系统采用：世界上最先进的匀加速多级压射系统

Hydraulic system consists of:The most advanced uniform accelerated multistage injection system in the world

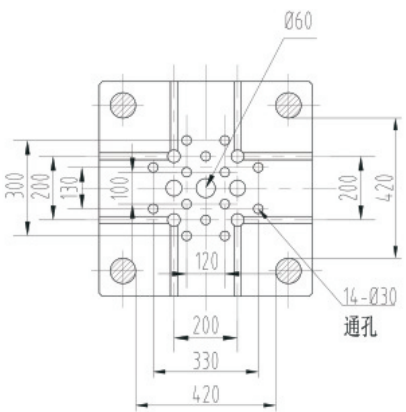

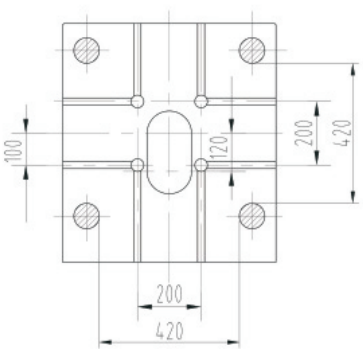

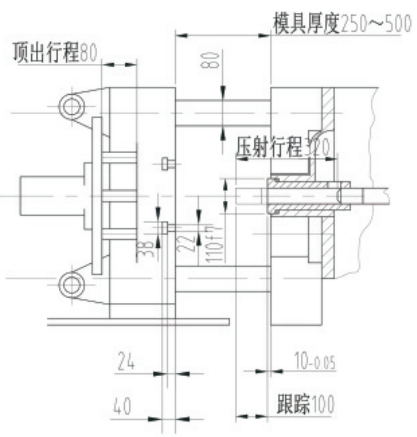

LH-160D压铸机 | DIE CASTING MACHINE



液压系统采用：世界上最先进的匀加速多级压射系统

Hydraulic system consists of:The most advanced uniform accelerated multistage injection system in the world

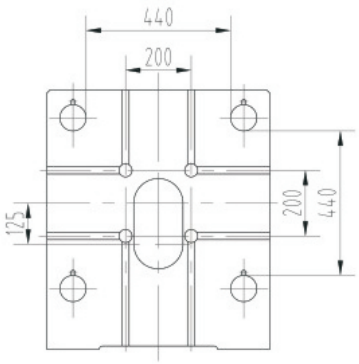

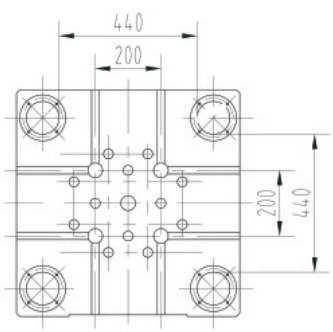

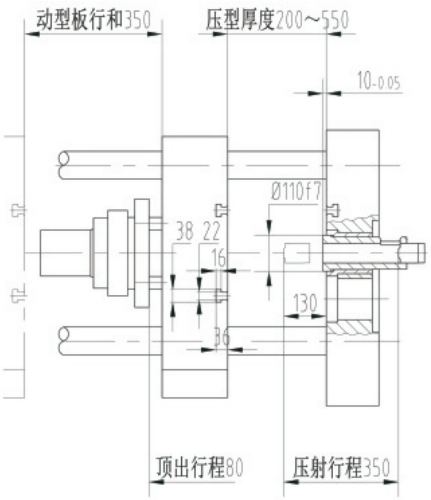

LH-160G压铸机 | DIE CASTING MACHINE



液压系统采用：世界上最先进的匀加速多级压射系统

Hydraulic system consists of:The most advanced uniform accelerated multistage injection system in the world

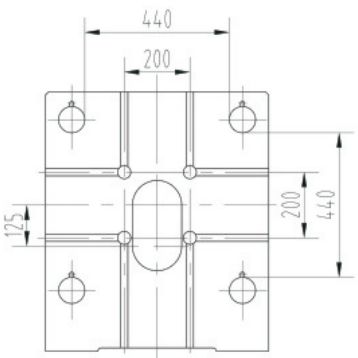

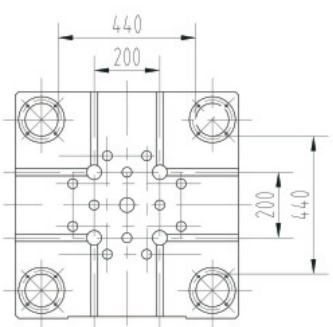

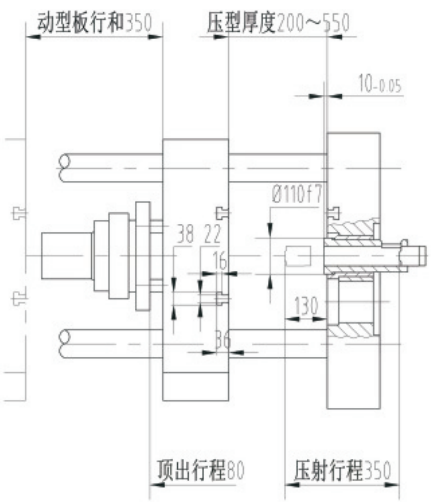

LH-180T压铸机 | DIE CASTING MACHINE



液压系统采用：世界上最先进的匀加速多级压射系统

Hydraulic system consists of:The most advanced uniform accelerated multistage injection system in the world

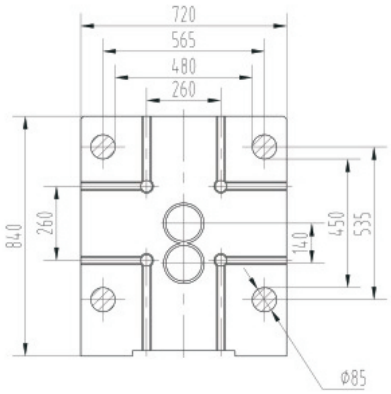

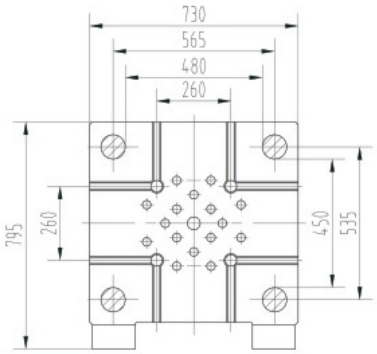

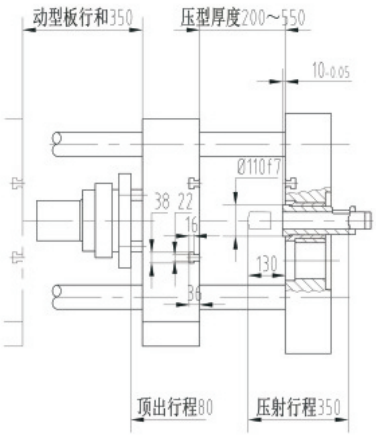

LH-200T压铸机 | DIE CASTING MACHINE



液压系统采用：世界上最先进的匀加速多级压射系统

Hydraulic system consists of:The most advanced uniform accelerated multistage injection system in the world

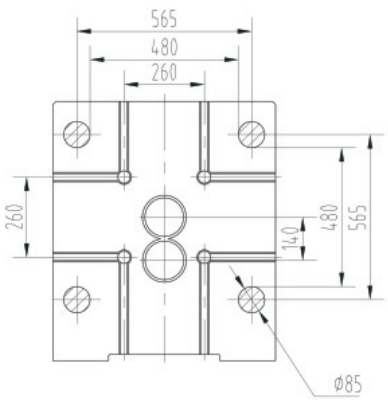

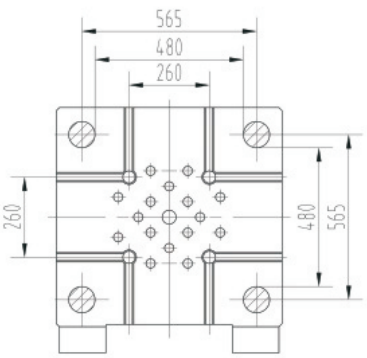

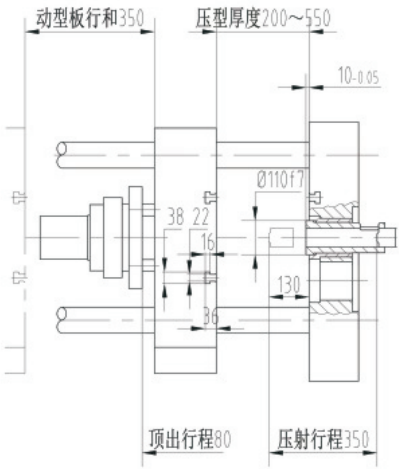

LH-300T压铸机 | DIE CASTING MACHINE



液压系统采用：世界上最先进的匀加速多级压射系统

Hydraulic system consists of:The most advanced uniform accelerated multistage injection system in the world

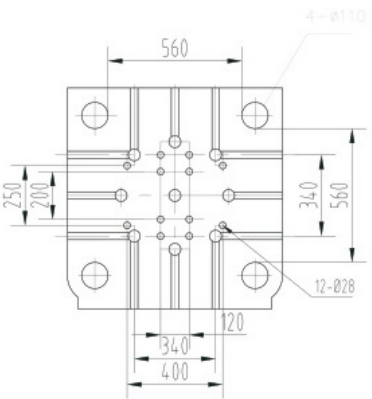

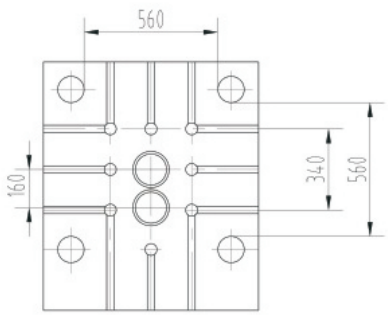

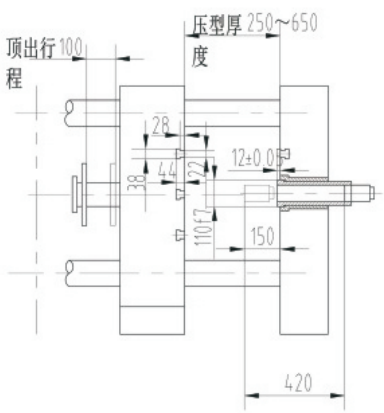

LH-400T压铸机 | DIE CASTING MACHINE



液压系统采用：世界上最先进的匀加速多级压射系统

Hydraulic system consists of:The most advanced uniform accelerated multistage injection system in the world

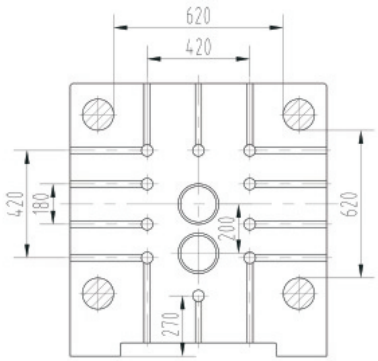

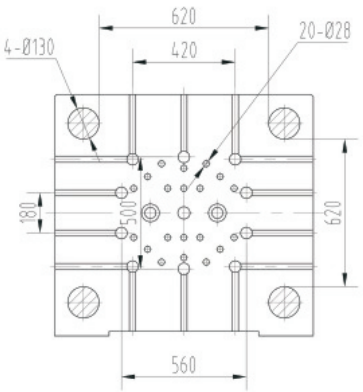

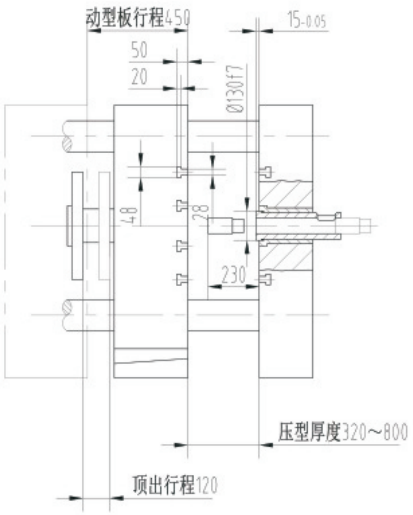

LH-500T压铸机 | DIE CASTING MACHINE



液压系统采用：世界上最先进的匀加速多级压射系统

Hydraulic system consists of:The most advanced uniform accelerated multistage injection system in the world

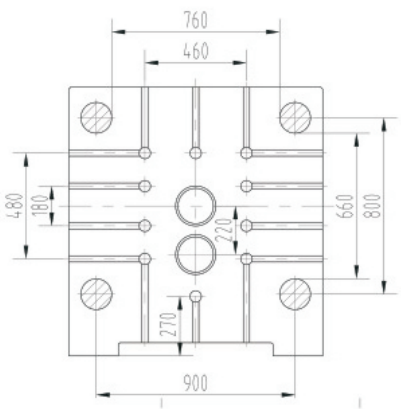

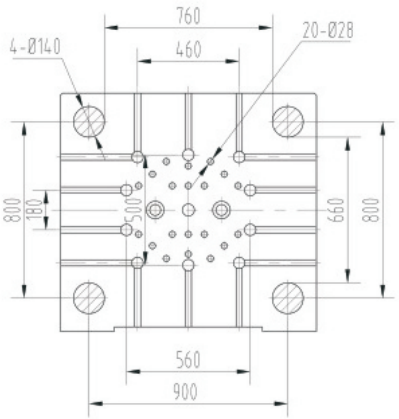

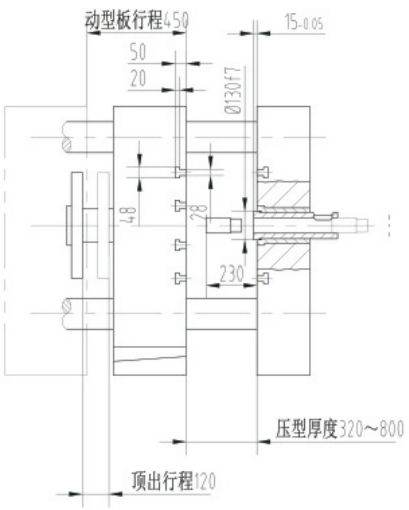

LH-700T压铸机 DIE CASTING MACHINE



液压系统采用：世界上最先进的匀加速多级压射系统

Hydraulic system consists of:The most advanced uniform accelerated multistage injection system in the world

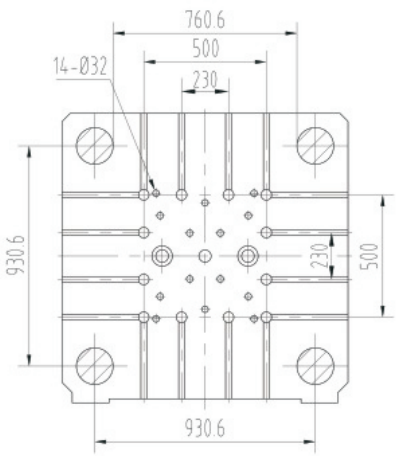

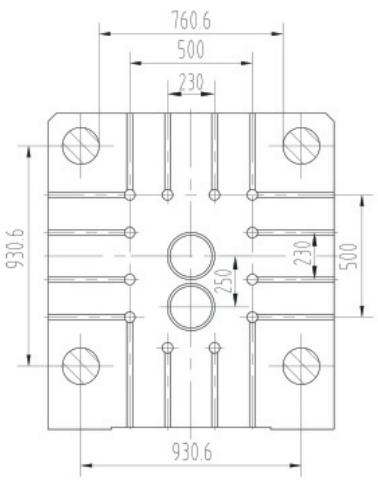

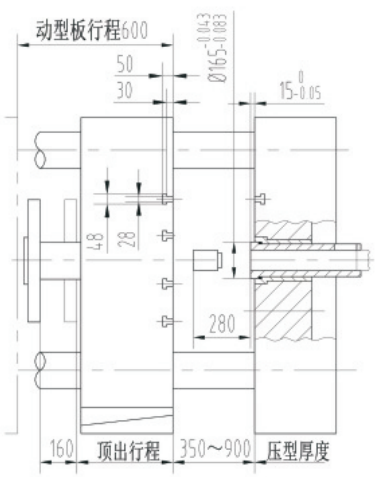

LH-800T压铸机 DIE CASTING MACHINE



液压系统采用：世界上最先进的匀加速多级压射系统

Hydraulic system consists of:The most advanced uniform accelerated multistage injection system in the world

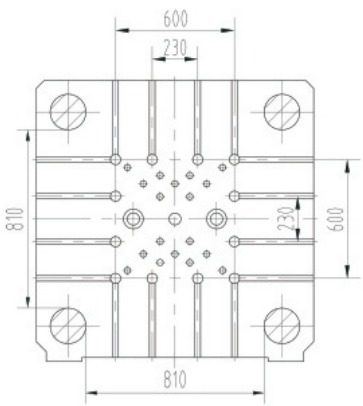

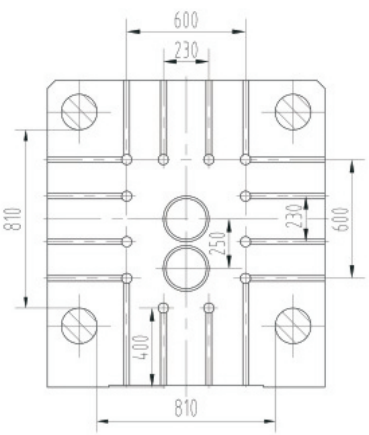

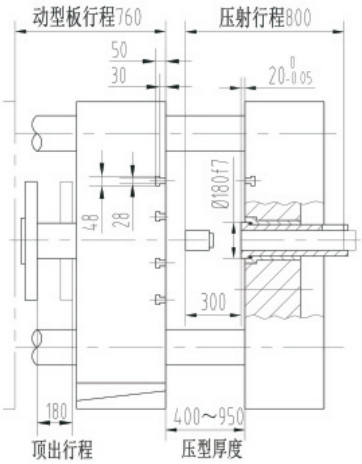

LH-900T压铸机 DIE CASTING MACHINE



液压系统采用：世界上最先进的匀加速多级压射系统

Hydraulic system consists of:The most advanced uniform accelerated multistage injection system in the world

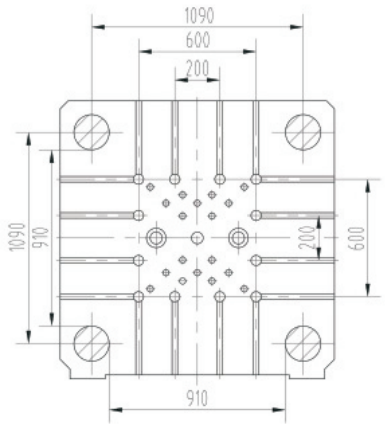

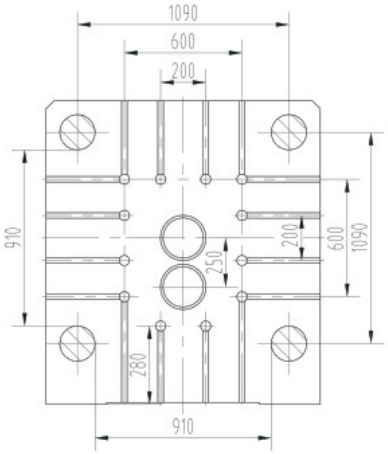

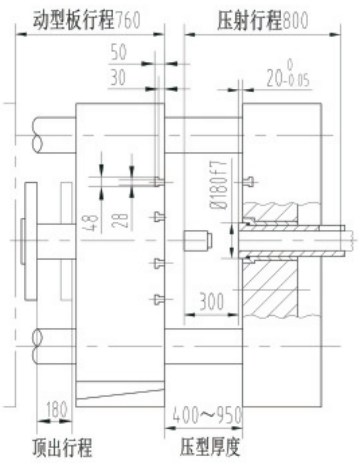

LH-1100T压铸机 | DIE CASTING MACHINE



液压系统采用：世界上最先进的匀加速多级压射系统

Hydraulic system consists of:The most advanced uniform accelerated multistage injection system in the world

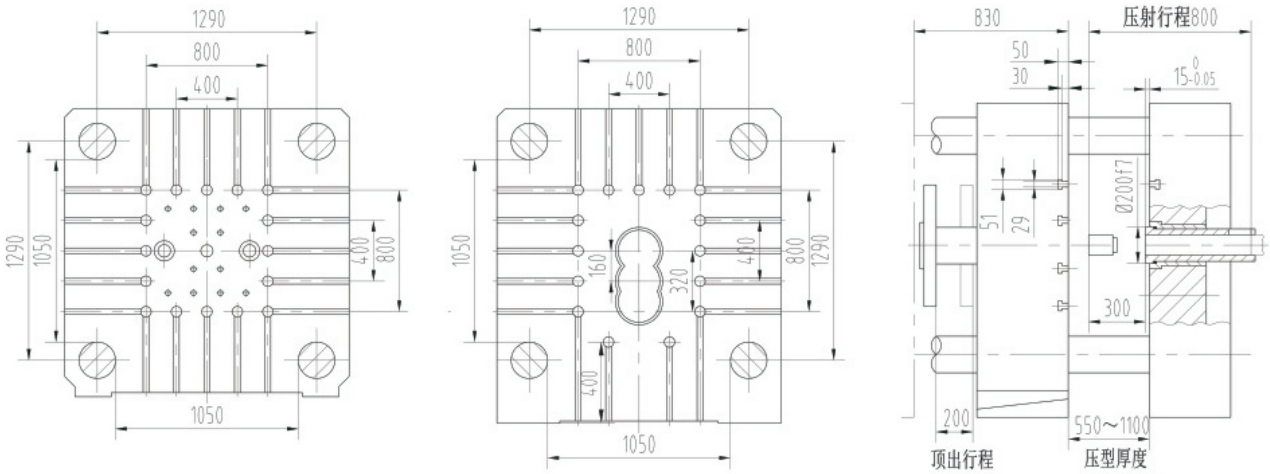

LH-1300T压铸机 | DIE CASTING MACHINE



液压系统采用：世界上最先进的匀加速多级压射系统

Hydraulic system consists of:The most advanced uniform accelerated multistage injection system in the world

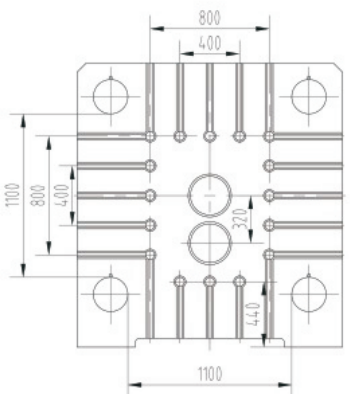

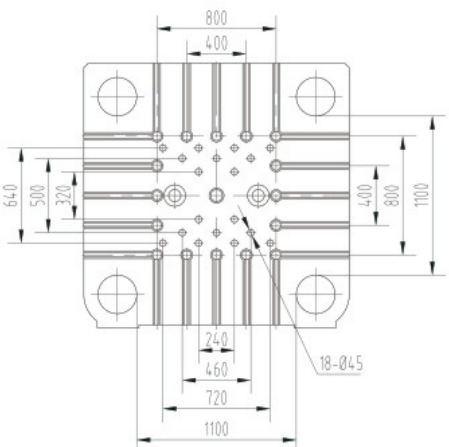

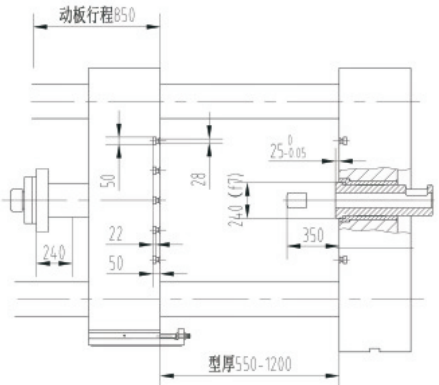

LH-2000T压铸机 DIE CASTING MACHINE



液压系统采用：世界上最先进的匀加速多级压射系统

Hydraulic system consists of:The most advanced uniform accelerated multistage injection system in the world

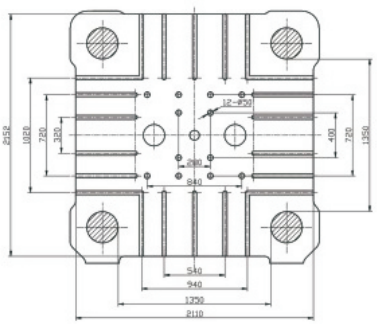

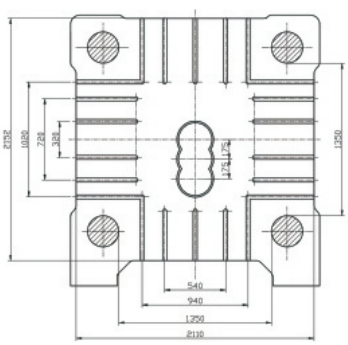

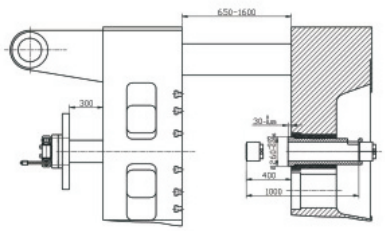

MAIN SPECIFICATIONS AND PARAMETERS

主要规格和参数

项目 ITEMS	单位	LH-140T	LH-160D	LH-160G	LH-180T	LH-200T	LH-220T	LH-280T	LH-300T	LH-400T	LH-500T
系统工作压力 HYDRAULIC WORKING PRESSURE	Mpa	7	7	7	14	14	14	14	14	14	14
锁模力 CLAMPING FORCE	KN	1400	1600	1600	1800	2000	2200	2800	3000	4000	5000
格林柱内距 SPACE BETWEEN TIE BARS	mm	420*420	440*440	440*440	480*450	480*480	500*500	560*560	560*560	620*620	760*660
导杠直径 TIE BAR DIAMETER	mm	¢80	¢80	¢80	¢85	¢85	¢90	¢110	¢110	¢125	¢140
锁模行程 DIE OPENING STROKE	mm	350	350	350	380	380	380	400	420	450	450
压射力(增压) INJECTION FORCE (INTENSIFY)	Mpa	180	220	220	270	270	270	240	315	415	450
压射头推出距离 PLUNGER LAUNCH DISTANCE	mm	120	120	120	130	135	140	140	140	200	250
压射位置 INJECTION POSITION	mm	0-140	0-140	0-140	0-140	0-140	0-140	0-160	0-160	0-175	0-220
冲头直径 PLUNGER DIAMETER	mm	¢40-¢60	¢40-¢60	¢40-¢60	¢50-¢70	¢50-¢70	¢50-¢70	¢50-¢70	¢50-¢70	¢60-¢80	¢70--¢90
射料行程 INJECTION STROKE	mm	320	320	320	350	350	370	420	420	500	580
铸造压力（增压） CASTING PRESSURE (INTENSIFY)	Mpa	143/92/64	143/92/64	143/92/64	112/78/57	112/78/57	112/78/57	143/99/73	143/99/73	141/104/80	135/117/92
压射室法兰凸出定板高度 CASTING FIANGE PROTRUSION	mm	10	10	10	10	10	10	12	12	12	15
压射室法兰直径 CASTING FIANGE DIAMETER	mm	110	110	110	110	110	110	110	110	130	130
最大铸造面积 (40Mpa) MAX CASTING AREA UNDER 40Mpa	CM2	375	390	400	450	450	500	700	700	1008	1209
射料量(铝) LNJECTION WEIGHT(AL)	Kg	1.6	1.8	1.8	2.4	2.4	2.6	3.2	3.5	5	6.9
模具厚度（最小—最大） DIE HEIGHT (MIN--MAX)	mm	200-500	200-550	200-550	200-550	200-550	200-600	250-650	250-650	300-750	300-800
顶出力 EJECTOR FORCE	KN	100	100	100	110	110	110	140	150	180	240
顶出行程 EJECTOR STROKE	mm	80	80	80	80	80	80	120	120	140	140
电机功率 MOTOR CAPACITY	KW	11	11	11	15	15	15	15	15	18.5	22
外型尺寸 (长*宽*高) MACHINE DIMENSIONS (L*W*H)	M	4.5*1.2*1.5	5*1.4*1.6	5.2*1.5*2.05	5.22*1.5*2.35	5.32*1.5*2.35	5.6*1.5*2.35	6.4*1.7*2.8	6.4*1.7*2.8	7.3*2*2.8	7.7*2.1*3.1
油箱容量 OIL TANK CAPACITY	L	300	300	400	600	600	680	750	750	1000	1200
机器吊装参考重量 REFERENTIAL MACHINE WEIGHT FOR UPLIFTING	T	4.7	4.8	5.2	6.7	7	7.5	12	12.5	16.5	20

我们有权做任何技术改进而不另行通知
WE reserve the right to make any technical improvement without further notice

MAIN SPECIFICATIONS AND PARAMETERS

主要规格和参数

项目 ITEMS	单位	LH-700T	LH-800T	LH-900T	LH-1000T	LH-1100T	LH-1300T	LH-1600T	LH-2000T	LH-2600T	LH-3500T
系统工作压力 HYDRAULIC WORKING PRESSURE	Mpa	14	14	14	16	16	16	16	16	16	16
锁模力 CLAMPING FORCE	KN	7000	8000	9000	10000	11000	13000	16000	20000	26000	35000
格林柱内距 SPACE BETWEEN TIE BARS	mm	750*750	810*810	910*910	930*930	1050*1050	1100*1100	1250*1250	1350*1350	1500*1500	1650*1650
导杠直径 TIE BAR DIAMETER	mm	¢170	¢170	¢180	¢180	¢200	¢230	¢260	¢280	¢310	¢340
锁模行程 DIE OPENING STROKE	mm	650	750	760	800	880	1000	1200	1400	1500	1500
压射力(增压) INJECTION FORCE (INTENSIFY)	Mpa	670	680	750	775	882	1075	1285	1500	1800	1950
压射头推出距离 PLUNGER LAUNCH DISTANCE	mm	295	280	295	300	300	320	360	400	450	480
压射位置 INJECTION POSITION	mm	0-250	0-250	0-250	0-250	0-300	-160-320	-175-350	-175-350	-175-400	-175-450
冲头直径 PLUNGER DIAMETER	mm	¢80-¢100	¢80-¢100	¢80-¢100	¢90-¢110	¢100-¢120	¢110-¢140	¢120-¢150	¢130-¢170	¢140-¢180	¢140-¢180
射料行程 INJECTION STROKE	mm	715	720	760	760	800	880	930	1000	1050	1150
铸造压力（增压） CASTING PRESSURE (INTENSIFY)	Mpa	153/78/57	153/78/57	154/121/81	154/121/81	138.6-78	137-70	137-73	113-66	110-6	125-75
压射室法兰凸出定板高度 CASTING FIANGE PROTRUSION	mm	15	20	20	20	20	25	25	30	30	30
压射室法兰直径 CASTING FIANGE DIAMETER	mm	165	180	200	200	240	240	260	260	280	280
最大铸造面积 (40Mpa) MAX CASTING AREA UNDER 40Mpa	CM2	1750	1900	2150	2250	2500	3125	4000	5000	6250	7500
射料量(铝) LNJECTION WEIGHT(AL)	Kg	11	13	14	15	18	25.4	30.8	41	50.9	60
模具厚度（最小—最大） DIE HEIGHT (MIN--MAX)	mm	350-900	350-900	350-950	400-1000	400-1150	450-1180	500-1400	650-1600	800-1800	850-2000
顶出力 EJECTOR FORCE	KN	315	315	315	360	500	570	570	650	750	900
顶出行程 EJECTOR STROKE	mm	260	200	180	190	200	200	250	300	300	300
电机功率 MOTOR CAPACITY	KW	30	30	30	37	30*2	30*2	37*2	45*2	55+75	165
外型尺寸 (长*宽*高) MACHINE DIMENSIONS (L*W*H)	M	8.4*2.2*3.1	9*2.2*3.1	9.1*2.4*3.3	10*2.7*3.3	10.6*3.5*3.8	11.8*3.7*4.2	11.8*4.6*4.7	13*4.7*4.8	13.6*5.5*5	16*4.8*4.8
油箱容量 OIL TANK CAPACITY	L	1250	1500	1500	1600	2800	2800	3000	3300	3700	5630
机器吊装参考重量 REFERENTIAL MACHINE WEIGHT FOR UPLIFTING	T	30	35	40	45	65	75	90	135	165	210

我们有权做任何技术改进而不另行通知
WE reserve the right to make any technical improvement without further notice

Main performance and characteristics

主要性能及特点

- 双比例控制（压力，流量电动调节，具备多级压力和速度控制以及低压合模保护功能）。
- 双回路设计（压射和增压独立设计，互不影响，零故障）。
- 四级(多段)压射系统：
  1.最高速度>8M/s（2000T以上6M/s），可有效控制填充时间及压铸件成型效果，独有刹车及匀加速压射功能，有效防止毛边，压射工艺更灵活.
  2.最低速度0.1—0.7M/s，可进行精确控制，避免空气进入引起藏气问题。
  3.增压建压时间≤15 M/s，可以按照工艺要求，改变增压速度，对压铸件加强密度而不会引起产品变型.
  4.空循环时间缩短15%以上，油泵流量增大20%以上，冷却器冷却能力增大100%以上，产品成品率提高100%，生产效率比过去提高20%以上。
- 国际优良PLC人机界面控制系统，压铸产品数据存储及监控功能，出现异常，及时报警保检，杜绝大批量残次品现象。
- 独有的静，动双抽芯性能，确保高精度，高难度产品一次成型。
- 压射系统采用欧式拉杆结构，中心及偏心多位置压射选择，方便调节，精度高，适用于多品种复杂的模具。
- 1600T以上大型压铸机采用液压抽杠装置，安全快速更换大型模具。
- 独立的特快锁模系统，独有液压驱动调节容模厚度结构，耐冲击，寿命长，实现快速生产，班产量提高15%以上。
- 科学的液氮安装工艺，保证配合精度，延长寿命。
- 优质的铸钢（球墨铸铁）模板，良好的刚性与耐磨性，采用有限元分析技术校核设计，应力分布合理，合模精度高。
- 中央电动润滑系统，定时定量润滑机绞，提高使用寿命。
- 电器及液压元件采用欧日及中国台湾名牌。
- 压铸单元岛设计理念，预留多种智能先进的周边设备接口和软件配套。

- Double proportional control (electric regulation of pressure and flow, with a multi-level pressure and speed control as well as low pressure die close protection functions).
- Dual circuit design (air injection and pressure building are separately designed without mutual interference and fault occurrence).
- four-stage (multi-stage) injection system:
  1.maximum speed> 8M/s (6M / s for those more than 2000T), which can effectively control the filling time and casting formation, in addition to unique braking and uniform acceleration injection function that can effectively prevent flash and allow more flexible injection process.
  2.Minimum speed 0.1-0.7M/s, which can be precisely controlled to prevent air invasion from causing air trap.
  3.Pressure building time ≤15 M/s, which allows to change pressure building speed according to process requirements, strengthening the casting density without causing product distortion.
  4.Dry cycle time is reduced by more than 15%; Oil pump flow increases by more than 20%; Cooler capacity is enhanced by more than 100%; Proportion of conforming finished products rise by 100%; productivity is improved by 20% as compared to the past.
- The internationally-favorable PLC man-machine interface control system, casting product data storage and monitoring capabilities, timely alarm in case of abnormality, and elimination of large quantities of defective products.
- Unique static and dynamic performance with dual core-pulling devices ensures one-time formation of precise, complicated products.
- The injection system uses European draw-bar structure with a variety of choices for center and eccentric injection positions that provide easy adjustment, high precision, and applicability to various complex molds.
- Large-scale die-casting machine above 1600T uses hydraulic pumping means which allows safe and fast replacement of large molds.
- Independent quick clamping system and unique hydraulic driven gear-type mold height adjusting mechanism are resistant to impact, providing longer service life and fast production, with an output on a shift increased by over 15%.
- Liquid nitrogen super low temperature installation method ensures precision and prolongs service life of toggle parts.
- High quality, high rigidity and wear resistant casting platen adopts finite element analysis design that brings even stress distribution, little distortion and precise mold clamping.
- Electric central lubrication system provides scheduled, quantitative lubrication and improves service life.
- Electrical and hydraulic components are well-known brands made in Europe, Japan and China Taiwan.
- Die-casting unit island design provides various interfaces and software packages for a variety of advanced intelligent peripheral devices.

36年的品质保证
THIRTY-SIX YEARS QUALITY ASSURANCE

压铸机配件及周边设备

PERIPHERAL EQUIPMENT AND PANRS



四连杆给汤机 | AUTOMATIC SOAP SUPPLY MANIPULATOR



产品特点:

1. 四连杆采用蜗轮蜗杆传动，变频器调速，使手臂运行更加快速平稳。
2. 采用三菱PLC及松下变频器控制，使汤臂定位更精确。
3. 采用中文人机界面触摸屏，可方便的对各种参数进行设定，对机器状态进行实时监控并有故障自诊断显示功能，使操作和维护都非常方便。
4. 机身传动部位均采用NSK轴承，性能稳定，使用寿命长。
5. 具有探针断线报警功能，使用更安全。
6. 舀汤量采用编码器控制，汤量更加精准。在手动／自动状态下均可增减汤量，重复性好，从而减少产品的不良率。

1.The four connecting rods are driven by worm gear, and the transducer is adjusted to make the arm run faster and smoothly.
2.The use of imported PLC and frequency converter is used to control the positioning of the soup arm.
3.Human-machine interface touch-screen, can be convenient to set various parameters, real-time monitoring of machine status and fault self-diagnosis display function, make the operation and maintenance is very convenient.
4.The fuselage transmission parts are used in NSK bearing, stable performance and long service life.
5.With probe line alarm function, use safer.
6.The soup is controlled by the encoder and the soup is more precise. The amount of soup can be added and reduced. under manual/automatic condition, which can reduce the defective rate.

机型 MODEL	LH-1	LH-2	LH-3	LH-4	LH-5	LH-6
适用于压铸机 FOR DIE CASTING MACHINE	125T-200T	250T-400T	450T-550T	630T-1000T	1250T-1600T	1800T-2500T
最大汤量 THE MAXIMUM AMOUNT OF SOUP	1KG	4.5KG	6.5KG	8KG	18KG	30KG
给汤精度 SOUP SUPPLYING PRECISION	±1%	±1%	±1%	±1%	±1%	±5%
最大送汤距离 SEND SOUP FARTHEST DISTANCE	1600MM	1740MM	1900MM	1970MM	2300MM	2400MM
汤臂马达 ARM MOTOR	1.5KW	1.5KW	1.5KW	1.5KW	2.2KW	2.2KW
汤勺马达 LADLE MOTOR	0.4KW	0.4KW	0.4KW	0.4KW	0.75KW	0.75KW
电源容量 POWER SUPPLY CAPACITY	380V/1KV	380V/1.2KV	380V/1.2KV	380V/1.2KV	380V/2KV	380V/2KV
循环节拍 CYCLE TIME	10SEC	12SEC	15SEC	16SEC	20SEC	22SEC

我们有权做任何技术改进而不另行通知
WE reserve the right to make any technical improvement without further notice

四连杆喷雾剂 | FOUR-BAR SPRAYER WTS



产品特点:

1. 采用旋转接头连接使气管和水管的运动曲线更加合理，另加装过滤器，使其有效地滤掉了混合液中的杂质。
2. 可单机自动，也可与给汤机、取出机连线，实现设备的全自动运行。
3. 可单独对定模、动模喷涂时间、喷雾量和吹气时间进行调整，节约涂料，提高铸件质量。
4. 有上升吹气之功能，可使在工作完上升的同时清扫固定在模具面上的污物，使模面保持清洁。
5. 可调整脱模剂的用量。
6. 上升、下降速度稳定，有快速下降减速功能，可延长缓冲器寿命，上升下降速度可调。

1.Use a rotating joint to make the windpipe and water pipes more reasonable, and the filters are added to effectively filter out the impurities in the mixture.
2.The machine can also be operated automatically by the machine, the machine is connected to the machine, and the machine is fully automatic.
3.It can be used to adjust the time of spray, spray and blow time, to save paint and improve the quality of castings.
4.With the function of rising air blowing, it is possible to clean the surface of the molds by cleaning up the dirt on the molds at the same time while the work is up.
5.Adjust the dosage of the stripper.
6.Rising and falling speed is stable, with rapid deceleration and deceleration function, which can prolong the life of the buffer and adjust the rate of decline.
7.The human-machine interface, can easily to set various parameters, real-time monitoring of machine status and fault self-diagnosis display function, makes the operation and use are very convenient.

机型 MODEL	LH-1	LH-2	LH-3	LH-4
适用于压铸机 FOR DIE CASTING MACHINE	125T-200T	250T-400T	450T-550T	630T-800T
最大铜管数 MAXIMUM NUMBER OF COPPER RUBE	>30PCS	>40PCS	>50PCS	>60PCS
升降行程 UP-DOWN STROKE	700MM	850MM	1100MM	1200MM
模厚调整 MOULD-WIDTH ADJUSTMENT	200MM	250MM	300MM	350MM
空压源压力 AIR PRESSURE SOURCE PRESSURE	5BAR	5BAR	6BAR	6BAR
脱模剂压力 RELEASE AGENT PRESSURE	4BAR	4BAR	4BAR	4BAR
空气消耗量 AIR CONSUMPTION	0.8立方米/MIN	1.0立方米/MIN	1.3立方米/MIN	1.4立方米/MIN
电源电容 POWER SUPPLY CAPACITY	380V/200W	380V/200W	380V/400W	380V/400W
循环节拍 CYCLE TIME	6SEC	8SEC	10SEC	10SEC

我们有权做任何技术改进而不另行通知
WE reserve the right to make any technical improvement without further notice

电动喷雾机(单伺服) | ELECTRIC SPRAYER

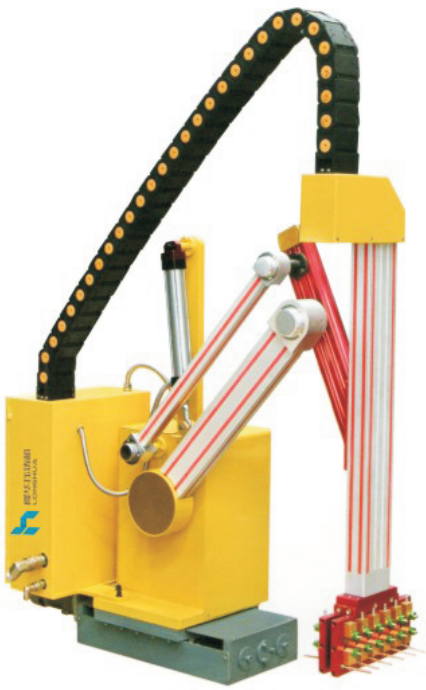

产品特点:

1.采用连杆式结构，机械强度高，稳定性好，使用寿命长。
2.采用台湾进口伺服马达，运行平稳。
3.可选择铜管式喷头或独立雾化喷嘴喷头。
4.触摸式人机界面可自由编辑喷涂程序，可循环喷涂或定点喷涂。带有故障自诊断显示功能。
5.带提前下降功能，可有效节约喷涂周期。
6.电动模厚调整功能，省时、省力、安全。

1.Using connecting rod structure, high mechanical strength, good stability and long service life.
2.Adopt Taiwan import servo motor, run smoothly.
3.Optional brass nozzle or independent atomizing nozzle nozzle.
4.The touch machine interface is free to edit the spray, but can be sprayed or sprayed on a fixed point. Fault self-diagnostic display function.
5.Bring down the function in advance, can save the spray cycle effectively.
6.Electric die adjustment function, save time, energy, safety.

机型 MODEL	LH-10	LH-20	LH-30	LH-40
适用于压铸机 FOR DIE CASTING MACHINE	125T-200T	250T-400T	450T-550T	630T-1000T
铜管数量 NUMBER OF BRASS	>35PCS	>40PCS	>70PCS	>80PCS
升降行程 UP-DOWN STROKE	700MM	850MM	1100MM	1200MM
底座行程 BASE ITINERARY	250MM	250MM	400MM	400MM
底座马达 MOTOR BASE	90W	90W	90W	90W
升降马达 HOIST MOTOR	0.75KW	1KW	1KW	1KW
电源容量 BATTERY CAPACITY	380V/0.75KW	380V/0.75KW	380V/1KW	380V/1KW
压缩空气压力 COMPRESSED AIR PRESSURE	5BAR	5BAR	5BAR	5BAR
脱模剂压力 RELEASE AGENT PRESSURE	4BAR	4BAR	4BAR	4BAR
空气消耗量 AIR CONSUMPTION	MIN/0.8立方米	MIN/1.0立方米	MIN/1.3立方米	MIN/1.4立方米
循环节拍 CYCLE TIME	5SEC	5SEC	6SEC	7SEC

我们有权做任何技术改进而不另行通知
WE reserve the right to make any technical improvement without further notice

电动喷雾机(单伺服) | ELECTRIC SPRAYER

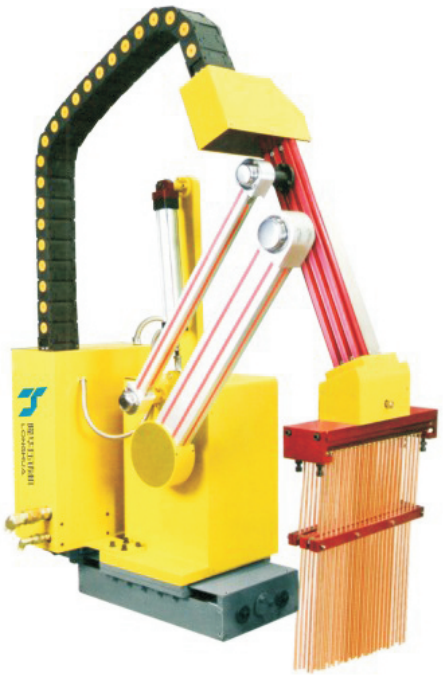

产品特点:

1.采用连杆式结构，机械强度高，稳定性好，使用寿命长。
2.采用台湾进口伺服马达，运行平稳。
3.可选择铜管式喷头或独立雾化喷嘴喷头。
4.触摸式人机界面可自由编辑喷涂程序，可循环喷涂或定点喷涂。带有故障自诊断显示功能。
5.带提前下降功能，可有效节约喷涂周期。
6.电动模厚调整功能，省时、省力、安全。

1.Using connecting rod structure, high mechanical strength, good stability and long service life.
2.Adopt Taiwan import servo motor, run smoothly.
3.Optional brass nozzle or independent atomizing nozzle nozzle.
4.The touch machine interface is free to edit the spray, but can be sprayed or sprayed on a fixed point. Fault self-diagnostic display function.
5.Bring down the function in advance, can save the spray cycle effectively.
6.Electric die adjustment function, save time, energy, safety.

机型 MODEL	LH-10	LH-20	LH-30	LH-40
适用于压铸机 FOR DIE CASTING MACHINE	125T-200T	250T-400T	450T-550T	630T-1000T
铜管数量 NUMBER OF BRASS	>35PCS	>40PCS	>70PCS	>80PCS
升降行程 UP-DOWN STROKE	700MM	850MM	1100MM	1200MM
底座行程 BASE ITINERARY	250MM	250MM	400MM	400MM
底座马达 MOTOR BASE	90W	90W	90W	90W
升降马达 HOIST MOTOR	0.75KW	1KW	1KW	1KW
电源容量 BATTERY CAPACITY	380V/0.75KW	380V/0.75KW	380V/1KW	380V/1KW
压缩空气压力 COMPRESSED AIR PRESSURE	5BAR	5BAR	5BAR	5BAR
脱模剂压力 RELEASE AGENT PRESSURE	4BAR	4BAR	4BAR	4BAR
空气消耗量 AIR CONSUMPTION	MIN/0.8立方米	MIN/1.0立方米	MIN/1.3立方米	MIN/1.4立方米
循环节拍 CYCLE TIME	5SEC	5SEC	6SEC	7SEC

我们有权做任何技术改进而不另行通知
WE reserve the right to make any technical improvement without further notice

直立式喷雾机 | ELECTRIC SPRAYER

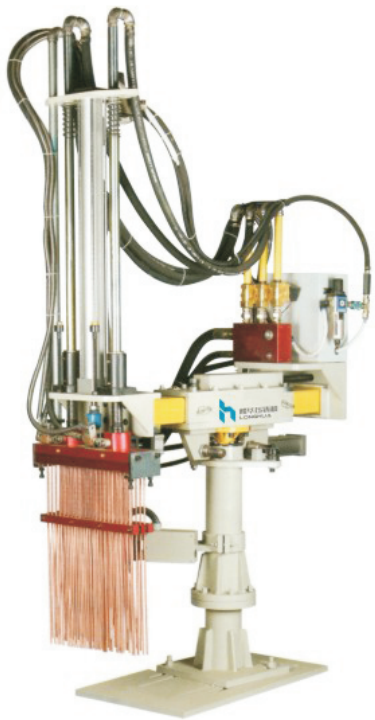

产品特点:

1.直立旋转式结构，喷雾结束后喷头向反操作侧旋转，避免因模具飞料造成喷头损坏。
2.旋转机构采用日本SMC气缸驱动，并装有缓冲器使旋转动作迅速稳定。
3.升降采用日本SMC气缸驱动带自锁装置防止气源消失时喷头下落。
4.雾化器经过重新设计，喷雾流量调节范围更广，雾化效果更佳。
5.可选择模上待机或后退待机，可选择提前旋转功能可有效缩短喷涂周期。
6.采用进口PLC，日本SMC电磁阀及气缸，使用寿命长，故障低。
7.配有中文人机界面，参数设定一目了然，带故障自诊断功能，使用及维修都极为方便。

1.Upright rotating structure, after the spray is finished, the nozzle rotates to the reverse operation side,Avoid the damage of the nozzle due to the flying of the mould.
2.The rotating mechanism is driven by the Japanese SMC cylinder and is equipped with a buffer to rotateThe movement is fast and stable.
3.Lifting adopts Japanese SMC cylinder drive, with self-locking device to prevent the air source from disappearingThe head drops.
4.Atomizer after redesign, spray flow regulation range is more wide, atomizationBetter effect.
5.Can choose the mode of standby or back standby, you can choose ahead of rotation functionEffectively shorten the spraying cycle.
6.Imported PLC, Japan SMC solenoid valve and cylinder, long service life,Low fault.
7.Chinese equipped with man-machine interface, parameter setting at a glance, with fault diagnosis.Breaking function, use and maintenance are extremely convenient.

机型 MODEL	LH-1	LH-2	LH-3	LH-4
适用于压铸机 FOR DIE CASTING MACHINE	125T-200T	250T-400T	450T-550T	630T-800T
最大铜管数 MAXIMUM NUMBER OF COPPER RUBE	>30PCS	>40PCS	>50PCS	>60PCS
升降行程 UP-DOWN STROKE	700MM	850MM	1100MM	1200MM
模厚调整 MOULD-WIDTH ADJUSTMENT	200MM	250MM	300MM	350MM
空压源压力 AIR PRESSURE SOURCE PRESSURE	5BAR	5BAR	6BAR	6BAR
脱模剂压力 RELEASE AGENT PRESSURE	4BAR	4BAR	4BAR	4BAR
空气消耗量 AIR CONSUMPTION	0.8立方米/MIN	1.0立方米/MIN	1.3立方米/MIN	1.4立方米/MIN
电源电容 POWER SUPPLY CAPACITY	380V/200W	380V/200W	380V/400W	380V/400W
循环节拍 CYCLE TIME	6SEC	8SEC	10SEC	10SEC

我们有权做任何技术改进而不另行通知
WE reserve the right to make any technical improvement without further notice

多连杆取件机 | PICKING MACHINE



产品特点:

1.采用多连杆式手臂，承载能力强，高速运行平稳。
2.采用减速电机驱动取臂。PLC及变频器控制，取臂可以在其行程范围内的任意点待机，提高了生产效率。
3.采用人机页面，可方便地对各种参数进行设定，对机器状态进行实时监控并带故障自诊断显示功能，操作和维护非常方便。
4.采用了编码器控制，使得取臂位置调整实现了数字化。

1.Using multi link arm, strong carrying capacity, smooth operation at high speed.
2.Use the speed reduction motor to drive the arm. PLC and frequency converter control, takeThe arm can stand at any point within its range of travel, thereby improving the lifeProductivity.
3.The use of man-machine pages, you can easily set all parameters, Monitor the machine status in real time and display the work with fault self diagnosisYes, it's very convenient to operate and maintain.
4.The encoder control is adopted, so that the number of the arms is adjustedWord formation.

机型 MODEL	LH-1	LH-2
适用于压铸机 FOR DIE CASTING MACHINE	125T-200T	250T-400T
取出重量 REMOVE WEIGHT	3KG	4.5KG
手臂行程 ARM STROKE	1550MM	1650MM
引拔行程 CROSSWISE STROKE	300MM	300MM
手臂马达 ARM MOTOR	0.75KW	0.75KW
引拔方式 LEAD TO PULL WAY	气动	气动
夹爪直径 CLIP CLAW DIAMETER	ϕ40~60	ϕ50~70
空压源入口径 AIR PRESSURE SOURCE DIAMETER	PT1/2"	PT1/2"
电源电容 POWER SUPPLY CAPACITY	380V/1KVA	380V/1.2KVA
循环节拍 CYCLE TIME	10SEC	12SEC

我们有权做任何技术改进而不另行通知
WE reserve the right to make any technical improvement without further notice

颗粒机 | PARTICLE MACHINE

产品特点:

1. 进料量大小可以调节。
2. 可和压铸机联动，合模一次，用料一次，或根据压铸机吨位大小调节合模多次，注料一次，可减少颗粒 用量，节约成本。
3. 送料精准、坚固耐用、故障率低。
4. 可减少压射头与料筒的摩擦，提高了润滑效果，增加射料速度，增强柱塞料管使用寿命。
5. 延长料管寿命比用柱塞油增加20%。

1. The feed size can be adjusted.
2. And die casting machine linkage, die once, materials used once, or according to die casting machine tonnage size adjustment die repeatedly, injection material once, can reduce the amount of particles, saving costs.
3. Feeding accurate, durable, low failure rate.
4. The friction between the injection head and the material barrel can be reduced, the lubrication effect is improved, the injection speed is increased, and the service life of the plunger pipe is increased.
5. Prolonging the service life of the pipe is 20% higher than that of the plunger oil.



规格/型号 SPECIFICATION/MODEL	LHKL
适用于压轴机 SUITABLE DIE －CASTING MACHINE	160T-800T
风压源 INPUT AIR PRESSURE	PT3/8",3-4KGF/CM²
电源 POWER SUPPLY	AC220V
重量 WEIGHT	19.75KG

我们有权做任何技术改进而不另行通知
WE reserve the right to make any technical improvement without further notice

输送机 | CONVEYOR



产品特点:

1. 高低可自行调整。
2. 变频控制行走更稳定。
3. 可根据产品多少来调整速度。
4. 有不锈钢链板和碳钢链板，可根据客户要求制作。
5. 有计时器控制，可间歇性传动，也可连续性传动。
6. 根据产品的大小和客户的要求可安装冷却风扇，加速产品的冷却。
7. 尺寸、规格可根据客户要求制作。
8. 可与取件机配套实现联动。

1.Degrees can be adjusted.
2.Frequency conversion control, more stable walking.
3.According to the number of products to adjust speed.
4.Stainless steel chain plate and carbon steel chain plate, can be made according to customer requirements.
5.Timer control, intermittent transmission, but also continuity drive.
6.Cooling fans can be installed according to the size of the product and the requirements of customers to accelerate the cooling of the product.
7.Size, specifications can be made according to customer requirements.
8.With the piece machine matching, realize linkage.

宽 WIDTH (MM)	长 LENGTH (MM)	前端升降范围 THE ASCENDING AND DESCENDING HEIGHT OF THEFRONT-END (MM)	后端升降范围 THE ASCENDING AND DESCENDING HEIGHT OF THE REAR-END (MM)	风扇数量 FAN NUMBER
400	3000	750-1100	850-1200	2只
600	3000	B取750-1100	B取950-1300	2只
		C取700-1050	C取850-1200	
800	3500	B取800-1100	B取950-1350	2只
	4500	C取700-1050	C取850-1200	3只
1000	4500	B取900-1250	B取1100-1500	3只
		C取800-1100	C取950-1350	
1200	4500	B取1000-1350	B取1100-1500	3只
		C取850-1200	C取950-1350	

我们有权做任何技术改进而不另行通知
WE reserve the right to make any technical improvement without further notice

生物质秸秆炉 | BIOMASS STRAW FURNACE



产品特点:

1.环保节能，在燃烧过程中，具有无烟，无火星，无刺鼻的气味，低排放，燃烧热卡高，灰少等特点，炉膛内的燃烧温度最高可达1200多摄氏度（可熔化锌合金，铝合金，铜合金等有色金属），1吨秸秆（锯末）颗粒，可熔化3-4吨铝水，每吨化铝成本仅在200元左右，比“焦炭炉，电炉，电磁炉，天然气炉”等节能40%-70%。

2.升温快，稳定性能高，熔化速度快，生物质颗粒炉1小时正常可升温500摄氏度，化开一锅铝水仅要2小时左右，化铝效率高，供应铝水及时。炉膛内的温度达到1200摄氏度，炉壁的温度却不到80摄氏度，成年人可正常触摸炉壁，有效降低了工作环境的温度。

3.PLC电脑全程控制，操作简单，独有的弯形发射口，保温更稳定，自动送料和自动送风系统，并且可根据您的需求来控制温度，在工作的时候可控制是650摄氏度，在保温的时候可控制在500摄氏度，不会浪费热量，实现最大幅度的节能。

1, environmental protection and energy saving in the combustion process, with no spark, no smoke, pungent odor, low emission, high calorie burning, low ash, furnace combustion temperature up to more than 1200 degrees Celsius (melting Aluminum Alloy, zinc alloy, copper alloy and other non-ferrous metals, 1 tons of straw (sawdust)) particles, melting 3-4 tons of aluminum water per ton of aluminum costs only 200 yuan, than the "coke furnace, electric furnace, induction cooker, gas stove and other energy-saving 40%-70%.

2, heating up fast, high stability, melting speed, biomass particle furnace 1 hours normal temperature rise of 500 degrees Celsius, and a pot of aluminum water only 2 hours or so, the efficiency of aluminum is high, the supply of aluminum water in a timely manner. The temperature in the furnace reaches 1200 degrees Celsius, but the temperature of the furnace wall is less than 80 degrees Celsius. The adults can touch the furnace wall normally and effectively reduce the temperature of the working environment.

3, PLC computer control, simple operation, curved emission mouth unique, insulation is more stable, automatic feeding and automatic feeding system, and can control the temperature according to your needs, while at work can be controlled at 650 degrees Celsius, when in the insulation can be controlled at 500 degrees Celsius, do not waste the maximum amplitude of the heat, energy saving.

熔铝量 MOLTEN ALUMINIUM CONTENT	尺寸（长*宽*高） SIZE(LENGTH * WIDTH * HEIGHT)	坩埚尺寸 CRUCIBLE SIZE	每天熔铝量 DAILY ALUMINIUM MELTING	适用压铸机 APPLICABLE DIE CASTING MACHINE	适产品大小 FIT PRODUCT SIZE	设备重量 EQUIPMENT WEIGHT
150KG	2000*1300*850	530*570	1000KG=1吨	180T	200G	2.6T
200KG	2000*1350*900	565*617	1200KG=1.2吨	180T-280T	200G-400G	2.8T
250KG	2000*1350*900	616*640	1600KG=1.6吨	180T-350T	200G-800G	2.8T
300KG	2000*1350*950	616*700	2000G=2吨	280T-350T	400G-1000G	3.2T
350KG	2000*1350*950	715*700	2300G=2.3吨	280T-350T	400G-1000G	3.2T
400KG	2100*1350*1100	720*740	3000KG=3吨	350T-500T	1000G-2000G	3.4T
500KG	2200*1500*1200	775*750	4000KG=4吨	500T-680T	2000G-4000G	3.6T
600KG	2200*1500*1350	770*900	4500KG=4.5吨	500T-680T	4000G-5000G	4.2T
800KG	2500*1700*1350	870*1000	5500KG=5.5吨	800T	5000G-7000G	4.5T
1000KG	2500*1700*1400	880*1100	6000KG=6吨	800T-1200T	6000G-8000G	5T

我们有权做任何技术改进而不另行通知
WE reserve the right to make any technical improvement without further notice

天然气炉 | NATURAL GAS FURNACE



型号 MODEL	品牌 BRAND	每小时立方 CUBIC METER PER HOUR	熔速（KG/H） MELTING RATE (KG/H)	温度 TEMPERATURE	熔量（KG） MELTING FLUX (KG)
LH-75	隆华	2.7	60	680	75
LH-100	隆华	3	80	680	100
LH-150	隆华	3.3	1120	680	150
LH-200	隆华	3.7	160	680	200
LH-250	隆华	3.9	200	680	250
LH-300	隆华	4.5	300	680	300
LH-400	隆华	5	360	680	400
LH-500	隆华	6.5	400	680	500
LH-600	隆华	7.8	500	680	650

用途:

天燃气熔铝炉可用于铝、锌、银、铅、锡、铜等有色金属的熔炼铸造和热镀之用。

产品特点:

1.以天燃气（液化气）为燃料，清洁安全，使车间整齐清洁，易于管理。
2.热效率高，运行成本低与电加热坩埚炉相比熔解能力大，效率高、能耗低，彻底省去了更换电热体之费用。
3.使用进口国际名牌燃烧器，使气体完全燃烧，废气排放完全没有污染， 多重热流通道设计，充分利用燃烧器产生的能量，大大提高热工作效率，节能效果显著。
4.尤其适宜于电力紧张及缺电地区，免除了扩大生产而需电力增容之忧。
5.热效率高 ：能适应压力波动，自行调节一次配风（ 即燃气压力大，吸入一次风多；燃气压力小，吸入一次风少 ），燃烧充分， 热效率高；
6.安全性高 ：该燃烧器配备小火。熔炉启动时，先点小火，当小火正常稳定燃烧时，自控系统才打开主燃气阀门，燃料才能进入锅炉正常燃烧，不会产生爆燃现象；
7.燃料适应性强：该种燃烧器只需更换少量部件就能适用于天然气、液化石油气、煤气、液化石油混合气以及其它类燃气。
8.燃气阀门组
熔炉可直接接入低压力燃气管道，不需要调压站。其燃气阀门为低压阀门。燃气阀门由三部分组成 手动阀门 电动阀门 燃气压力调节阀某些型号锅炉电动阀门与压力调节阀门为同一个阀，可根据用户要求另外设置燃气最高压力开关、燃气最低压力开关； 燃气压力调节阀要求阀前压力 5-11 英寸水柱（ 127 毫米水柱 — 279.4 毫米水柱），阀门压力不低于 3.5 英寸水柱（ 88.9 毫米水柱 ）。液化石油气阀门压力要求 11 英寸水柱；
9.断气保护装置
燃气管道上设置有最高压力开关和最低压力开关，当断气或燃气压力降低到某一值时，最低压力开关启动，系统自动关闭；当燃气压力过高时，最高压力开关启动，系统自动关闭。

1. use:
The gas melting aluminium furnace can be used for smelting, casting and heat plating of nonferrous metals such as aluminum, zinc, silver, lead, tin and copper.
2. features: warming faster
1.the gas (liquefied petroleum gas) as fuel, clean and safe, so that the workshop clean and tidy, easy to manage.
2.The utility model has the advantages of high thermal efficiency and low running cost. Compared with the electric heating crucible furnace, the utility model has the advantages of large melting power, high efficiency and low energy consumption, and completely eliminates the cost of replacing the electric heating body.
3.the use of imported international brands of gas burner, complete combustion, exhaust emissions of no pollution, the design of multiple heat channel, make full use of the energy generated by the burner, can greatly improve the heat efficiency, energy saving effect is remarkable.
4.especially suitable for electric power shortage and power shortage areas, so as to avoid the need to enlarge production and increase power capacity.
5.high thermal efficiency: can adapt to pressure fluctuations, self adjustment of a distribution of air (ie gas pressure, inhalation of primary air more; gas pressure is small, inhalation of less primary air), burning sufficient, high thermal efficiency;
6.high safety: this burner is equipped with small fire. When the furnace is started, a small fire is first made, and when the small fire is normally and stably burned, the automatic control system opens the main gas valve, and the fuel can enter the boiler to burn normally, and no deflagration phenomenon occurs;
7.fuel adaptability: the burner only needs to replace a small number of components, it can be applied to natural gas, liquefied petroleum gas, gas, liquefied petroleum gas mixture and other gas.
8.gas valve group
The furnace can be directly connected to the low pressure gas pipeline, does not need the station. The gas valve is a low pressure valve. The gas valve is composed of three parts the manual valve electric valve gas pressure regulating valve and pressure valve electric boiler control valve for some models with a valve, according to the requirements of users can also set the maximum pressure of the gas switch, the minimum gas pressure switch; gas pressure regulating valve to the valve before the pressure 5-11 inches of water (127 mm - 279.4 mm water column water column), the valve pressure is not less than 3.5 inches of water (88.9 mm water column). LPG valves require 11 inch water column;
9, gas protection device
The gas pipeline is arranged on the highest and the lowest pressure switch pressure switch, when gas or gas pressure is reduced to a certain value, the minimum pressure switch, the system automatically shut down; when the gas pressure is too high, the highest pressure switch, the system automatically shut down.

我们有权做任何技术改进而不另行通知
WE reserve the right to make any technical improvement without further notice

电炉 | PARTICLE MACHINE



产品特点:

1.世界上最先进的可控硅比例控制节能系统。
2.炉底设置安全门漏铝指示报警。
3.独有的专利电阻丝，发热大，耗电低，寿命长。
4.可靠的人性化电路设计，故障率低，操作简单。
5.采用德国技术，比传统电炉省电30%以上。
6.符合节能环保要求。

1.the world's most advanced SCR controlled energy saving system.
2.the bottom of the furnace is equipped with the safety door leakage aluminum indication alarm.
3.unique patented resistance wire, with high heating, low power consumption and long service life.
4.reliable user-friendly circuit design, low failure rate, simple operation.
5.using German technology, saving more than 30% of the traditional electric furnace.
6.meet the requirements of energy conservation and environmental protection.

型号 MODEL	规格（¢-H） SPECIFICATIONS	最大功率（KW） MAXIMUM POWER	熔速（KG/H） MELTING RATE	温度 TEMPERATURE	熔量（KG） MELTING FLUX	重量（T） WEIGHT
150	1240*880	42	50	750	150	0.9
200	1300*1020	51	80	750	200	1
250	1330*1020	63	100	750	250	1.1
300	1330*1090	68	120	750	300	1.2
350	1440*1090	70	150	750	350	1.3
400	1490*1140	70	200	750	400	1.4
500	1560*1225	80	250	750	500	1.5
600	1660*1325	80	300	750	600	1.6
800	1760*1425	100	400	750	800	1.8
1000	1860*1525	120	500	750	1000	2

名称 NAME	规格 SPECIFICATIONS	产地 PLACE OF ORIGIN	用途 PURPOSE	备注 REMARKS
钢材		中国沙钢	炉体外壳	环保防热防碰
保温材料	超轻质硅酸铝	鲁阳股份	炉体部分	保温性能强
保温材料	硅酸铝纤维毡	膨胀至石粉	炉体部分	保温性能强
节能电阻丝	SG-52	日本	节能高效	发热快，耗电少
浇注料	TK-85	鲁阳股份	炉膛喷火	高强不沾铝浇注料
耐火砖	T-45	山东淄博	炉膛部分	一级高铝
石墨坩埚	-------	山东金顿	铝液容器	保用3个月

我们有权做任何技术改进而不另行通知
WE reserve the right to make any technical improvement without further notice

压铸件产品展示 | DIE-CASTING PRODUCT DISPLAY

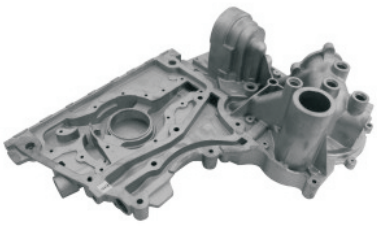

机油冷却模块壳体
Oil cooling module housing

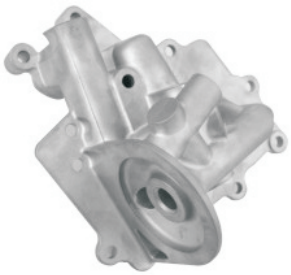

汽车油泵壳体
Automobile oil pump housing

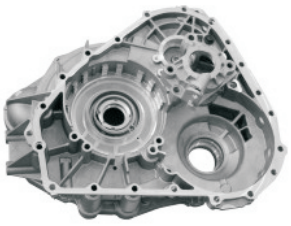

离合器壳体
Clutch housing

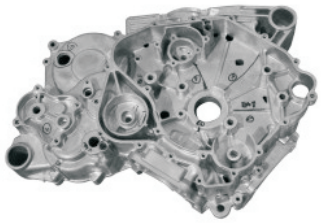

箱体
Cabinet

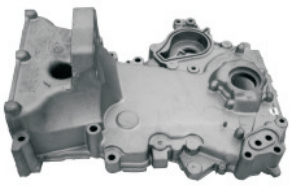

正时齿轮室盖
Timing gear chamber cover

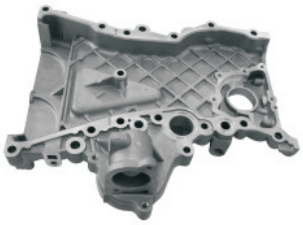

壳体
Outer housing

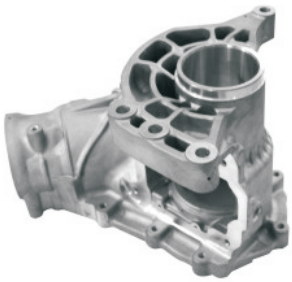

铝合金压铸件
Aluminum alloy die casting

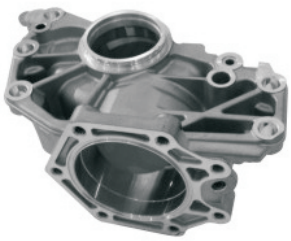

传动系统壳体
Drive system housing

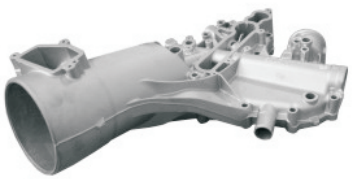

机油滤清器壳体
Oil filter housing

出口设备现场 | PARTICLE MACHINE













协同合作 共创未来
CREATE A BETTER FUTURE

玉柴机器

HUAWEI

广汽集团 GAG GROUP

ITATFOOK

上汽通用汽车 SAIC-GM

长城汽车

lenovo 联想

东风汽车 DONGFENG MOTOR

LIUGONG 柳工

大洋 DAYANG 中外合资

CRH China Railway High-speed 中国铁路高速

FOXCONN 富士康科技集团

隆华压铸机
LONGHUA

承诺是金 贵在秉持

QUALITY ASSURANCE



合作流程
Cooperation process

前期洽谈 Preliminary negotiation
隆华压铸机专业销售顾问及资深工程师一对一进行客户需求咨询解答。
Long Hua die casting machine professional sales consultants and senior engineers, one to do customer demand consulting solutions.



生产制造 Production
严格按照客户需求安排生产计划，并贯彻隆华严谨的装配流程，生产优质的产品。
Arrange production plan strictly according to customer's requirement, and carry out the rigorous assembly procedure of Hua Hua, and produce high quality products.



设备安装调试 Installation debugging
根据现场安装条件，与甲方密切沟通。经严格调试机器预备验收！
Communicate with Party A according to site installation condition. After strict commissioning, the machine is ready for acceptance!



验收交付 Acceptance delivery
设备装配完成后，公司内部将进行验收测试，验收合格后，
邀请客户进行再次检验，确保产品可靠稳定。
After the equipment assembly is completed, the acceptance test will be carried out within the company. After acceptance, the customer is invited to have a re test to ensure the product is reliable and stable.



维护保养 Maintenance
隆华将不定期对出厂机器进行维护保养工作，确保设备稳定运行。
Longhua will carry out maintenance work on the factory machines periodically to ensure the stable operation of the equipment.



终生售后服务支持 After-sale service
客服电话7X24小时不间断服务，并在3小时之内给予专业解决方案。
Customer service phone 7X24 hours of uninterrupted service, and within 3 hours to give professional solutions.



隆华压铸机
LONGHUA

蚌埠隆华压铸机有限公司
BENGBU LONGHUA DIE CASTING MACHINE CO., LTD.

skype: +86 13955418458
Email:Top@diecastingmachinechina.com
Web：http://www.diecastingmachinechina.com
Mob/WhatsApp: +86 13955418458
Wechat: +86 13955418458

